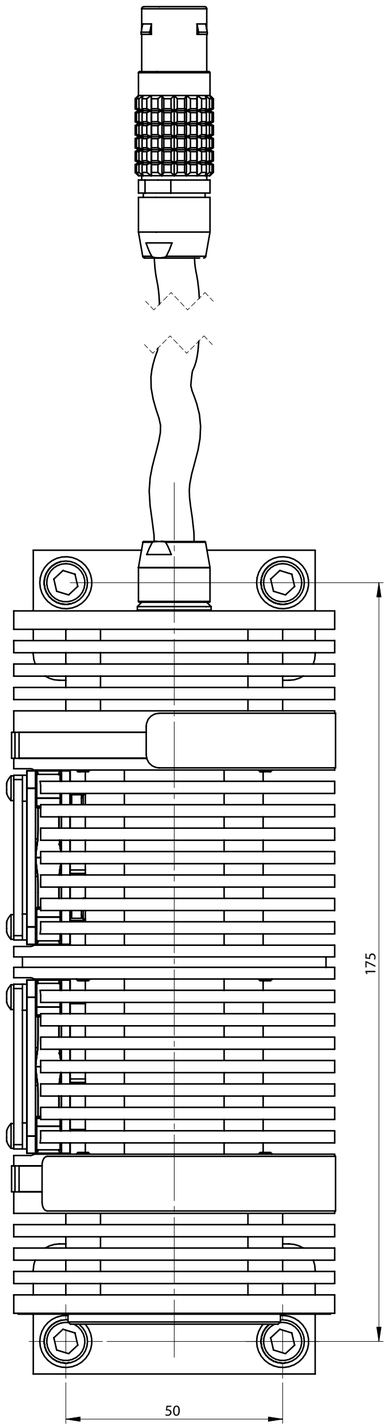

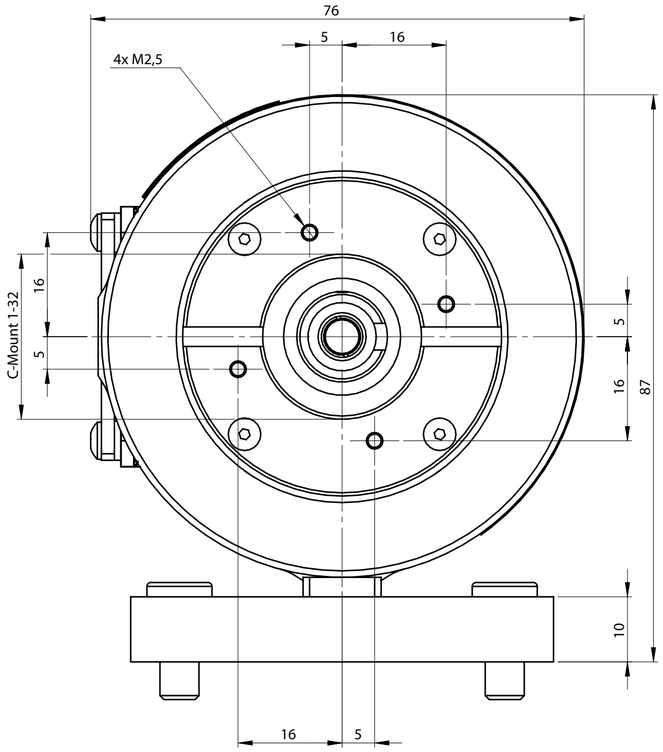

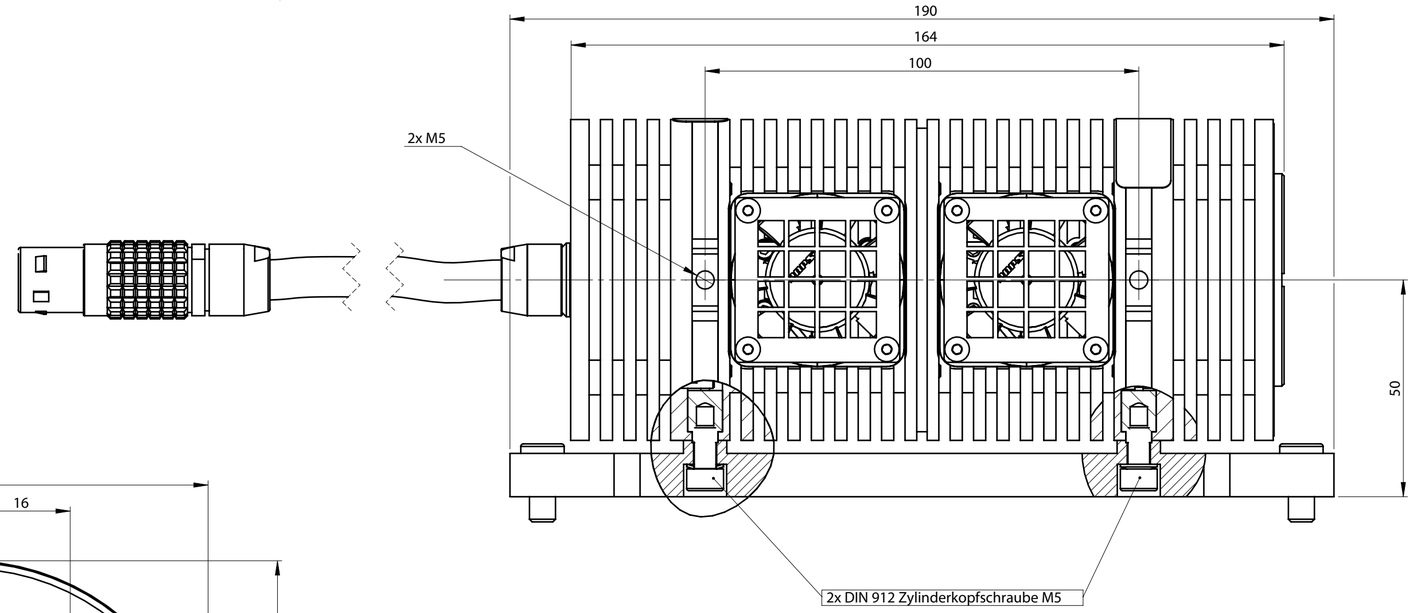

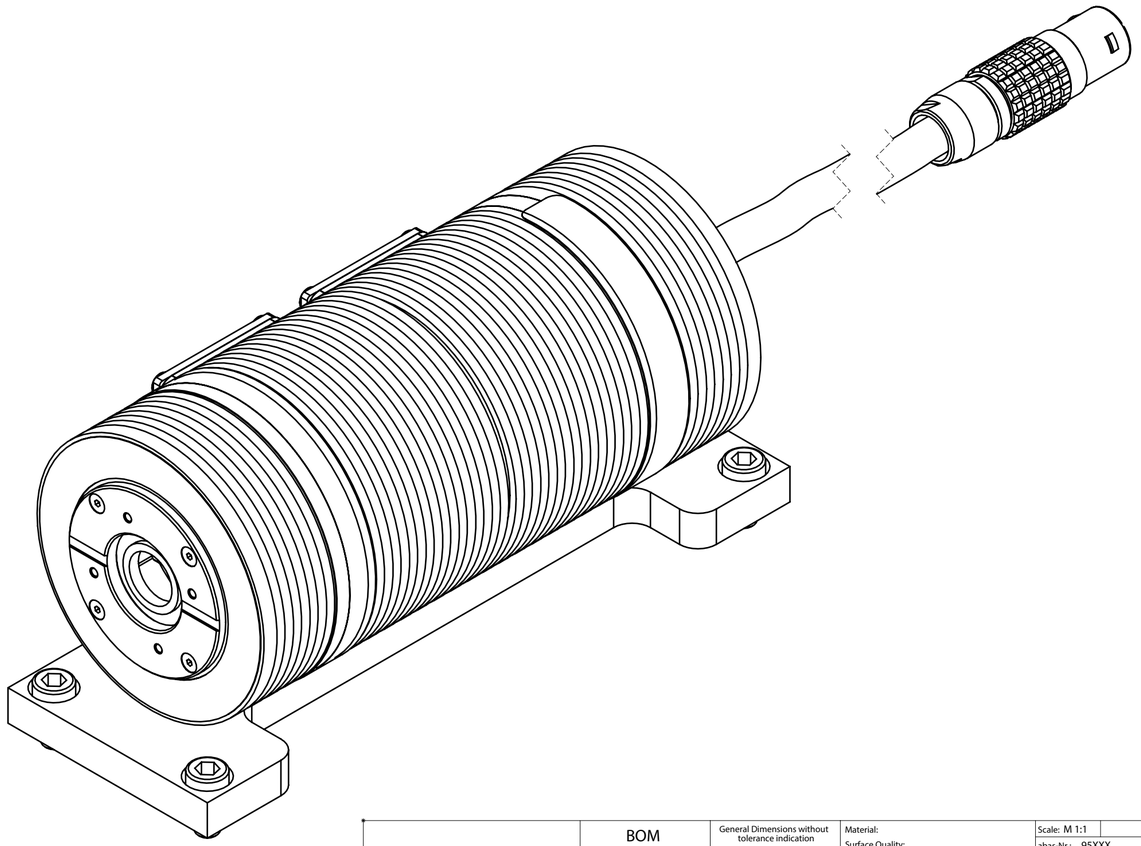

BOM	General Dimensions without tolerance indication	Material:	Scale: M 1:1 / Pos.:
Drawing Standard DIN 406		Surface Quality:	abas-Nr.: 95XXX
		Points to: PQ.080.0000.0002.12_LDH-IX_Main-Dimensions	Storage: Auftrags-LP
	Date	Last save: henning	Weight: 1220.22
	19.04.2018		
	The content of this drawing is the intellectual property of Picoquant and may not be copied or forwarded to third parties		
	PICOQUANT Rudower Chaussee 29 D-12489 Berlin Tel: +49-30-1208820-0 info@picoquant.com	Title: PQ.080.0000.0002.12_LDH-IX_Main-Dimensions	
		Drawing Number PQ.080.0000.0002.12	Sheet 1 / 1
		Supplier No: / Feedstock:	Size: A2