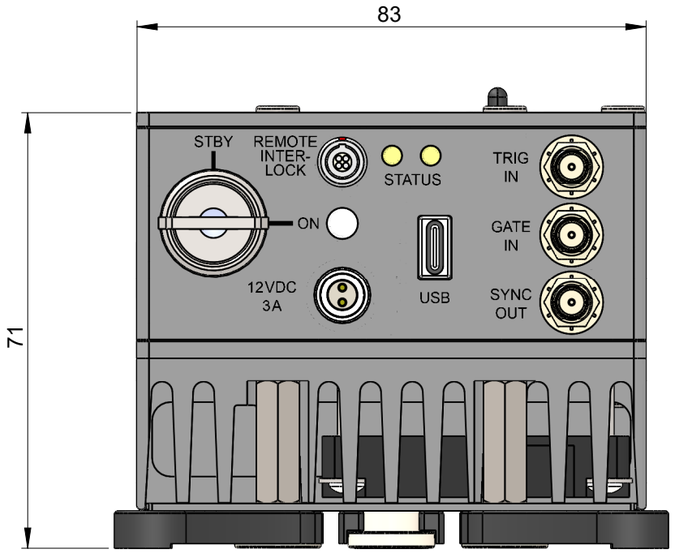

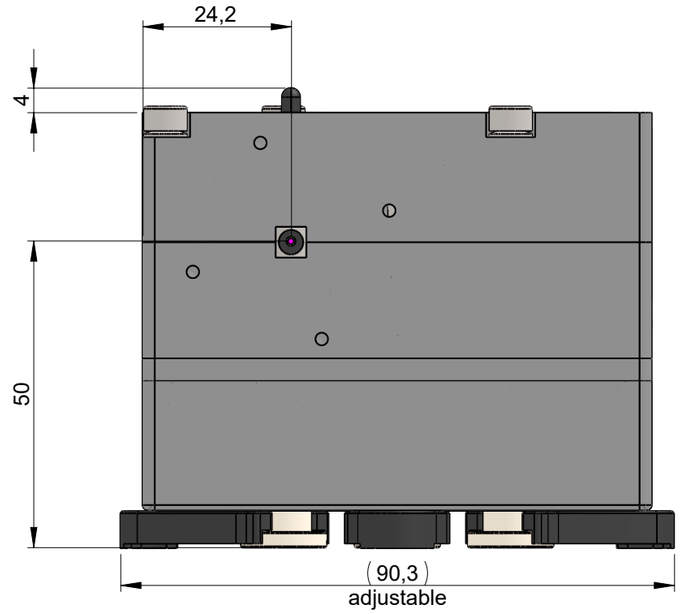

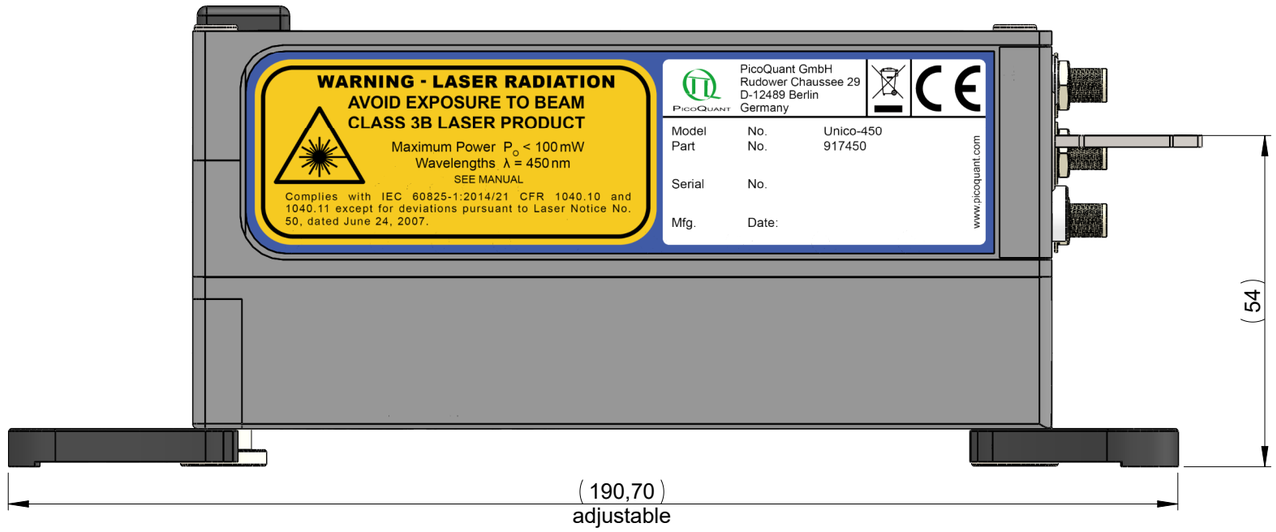

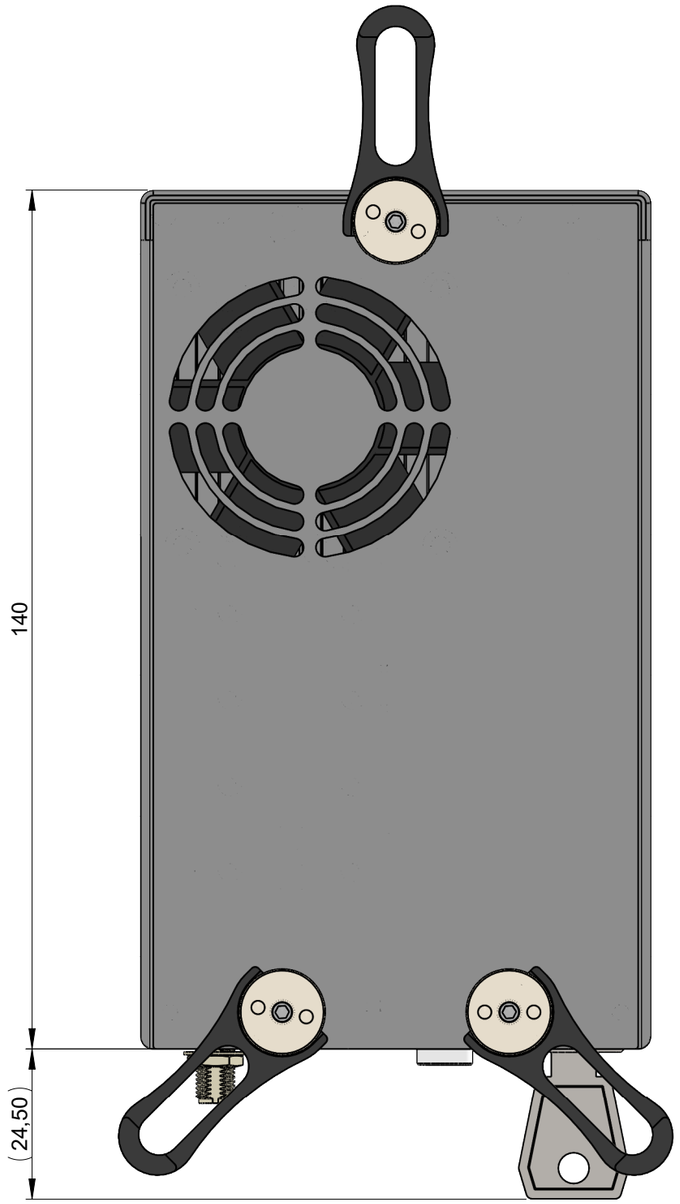

Unico	Dimension sheet	General Dimensions without tolerance indication		Scale: M 1:1
Drawing Standard DIN 406		Name / Date		Weight: approx. 953.64 g
		Edited: Henning 17.12.2024		

The content of this drawing is the intellectual property of Picoquant and may not be copied or forwarded to third parties

PICOQUANT
Rudower Chaussee 29
D-12489 Berlin
Tel: +49-30-1208820-0
Fax: +49-30-1208820-90
info@picoquant.com

Title: PQ.088.1000.1101.12_Unico_Webpage

Drawing Number: PQ.088.1000.1001.12

Sheet 1 / 1

Supplier No: N.N. | Feedstock: N.N. | Size: A3